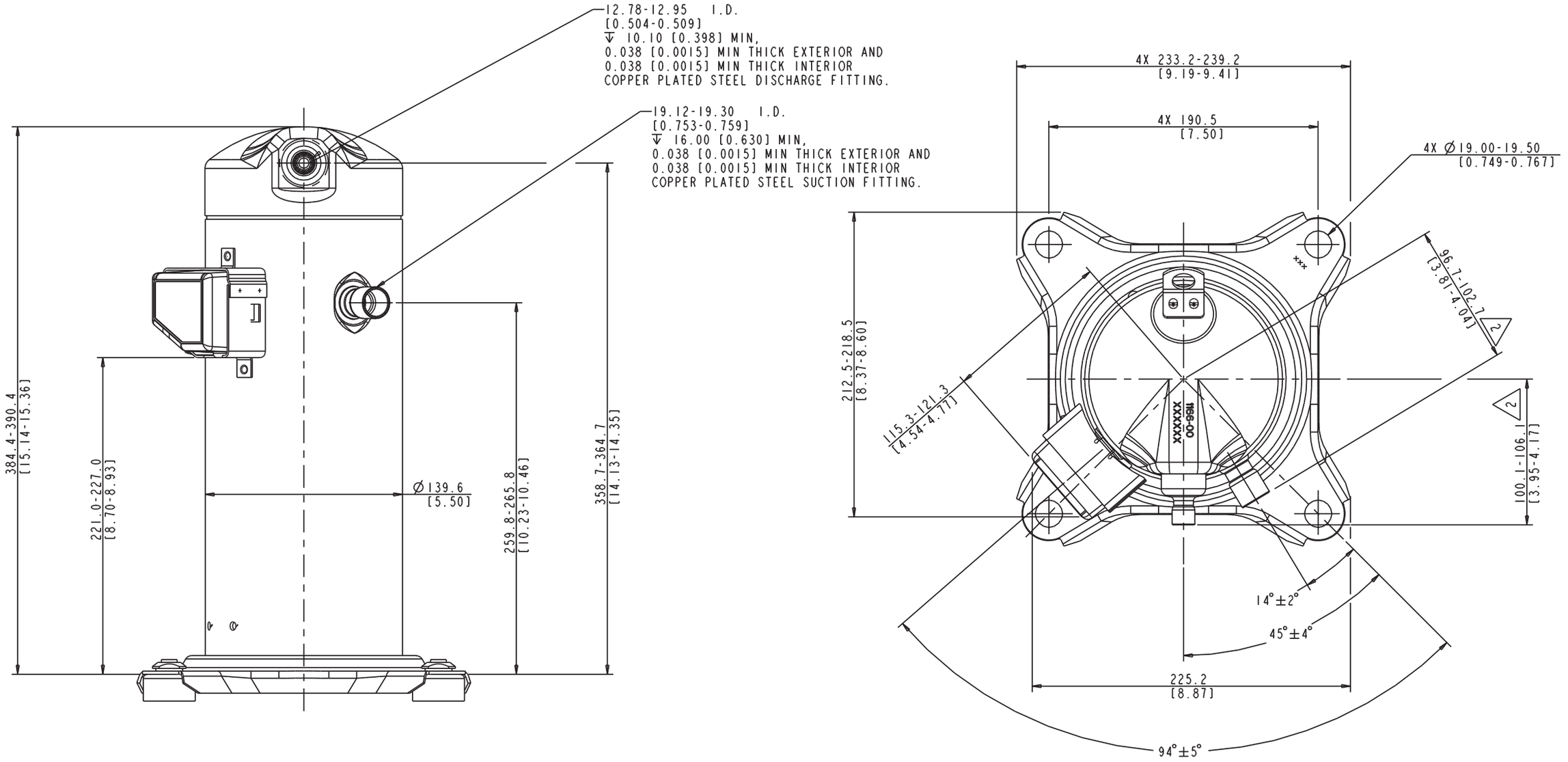ZP16/20/21/24/25/29/31K5E ZP16/24/25/29/31KSE