ZR81KC, KCE

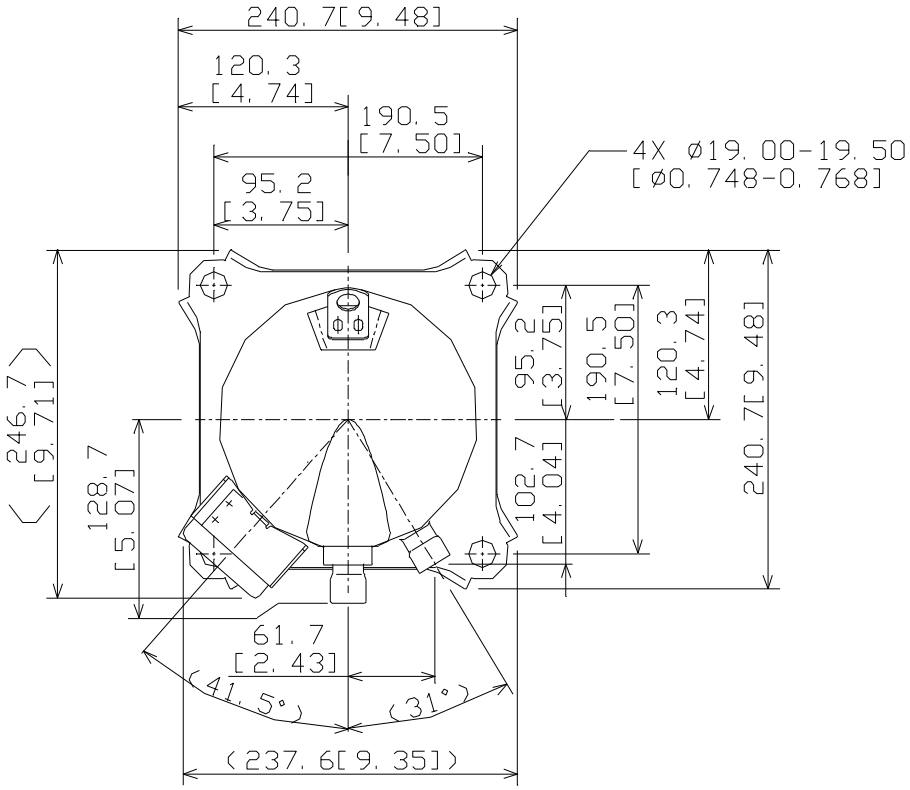
240.7[9.48]
120.3
[4.74]
190.5
[7.50]
95.2
[3.75]
4X ø19.00-19.50
[ø0.748-0.768]
246.7
[9.71]
128.7
[5.07]
95.2
[3.75]
190.5
[7.50]
120.3
[4.74]
240.7[9.48]
102.7
[4.04]
61.7
[2.43]
(41.5°)
(31°)
(237.6[9.35])

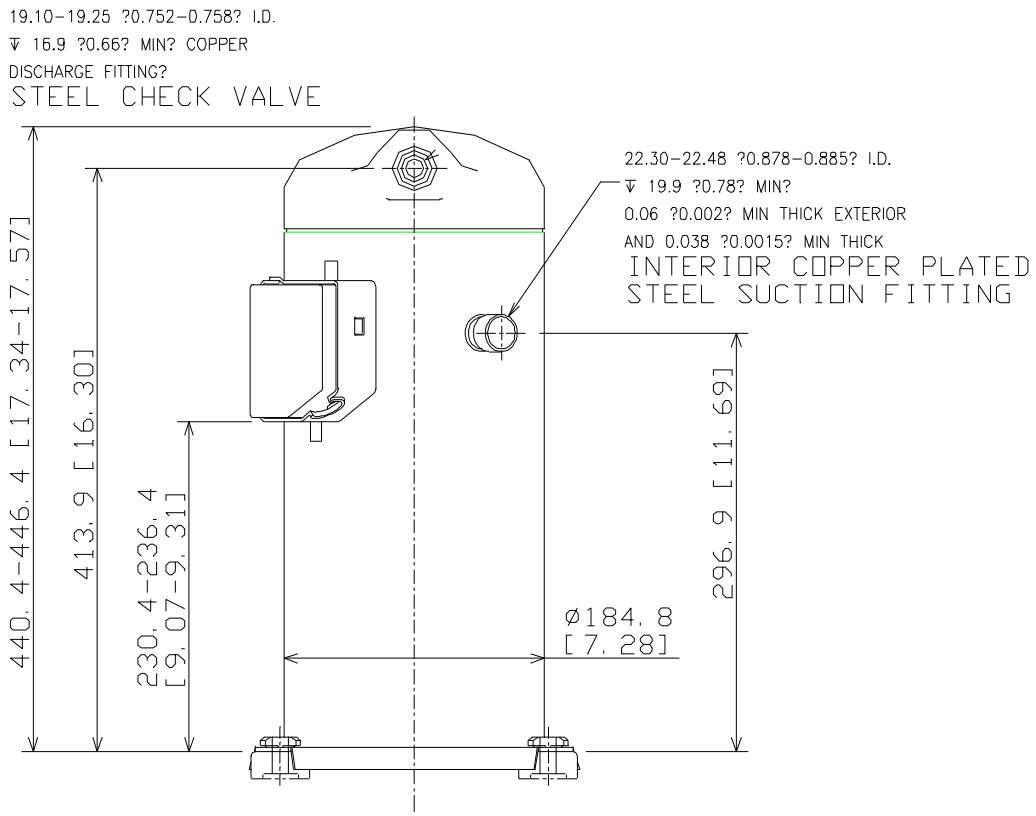
19.10-19.25 ?0.752-0.758? I.D.
⊽ 16.9 ?0.66? MIN? COPPER
DISCHARGE FITTING?
STEEL CHECK VALVE
22.30-22.48 ?0.878-0.885? I.D.
⊽ 19.9 ?0.78? MIN?
0.06 ?0.002? MIN THICK EXTERIOR
AND 0.038 ?0.0015? MIN THICK
INTERIOR COPPER PLATED
STEEL SUCTION FITTING
440.4-446.4 [17.34-17.57]
413.9 [16.30]
230.4-236.4
[9.07-9.31]
296.9 [11.69]
ø184.8
[7.28]